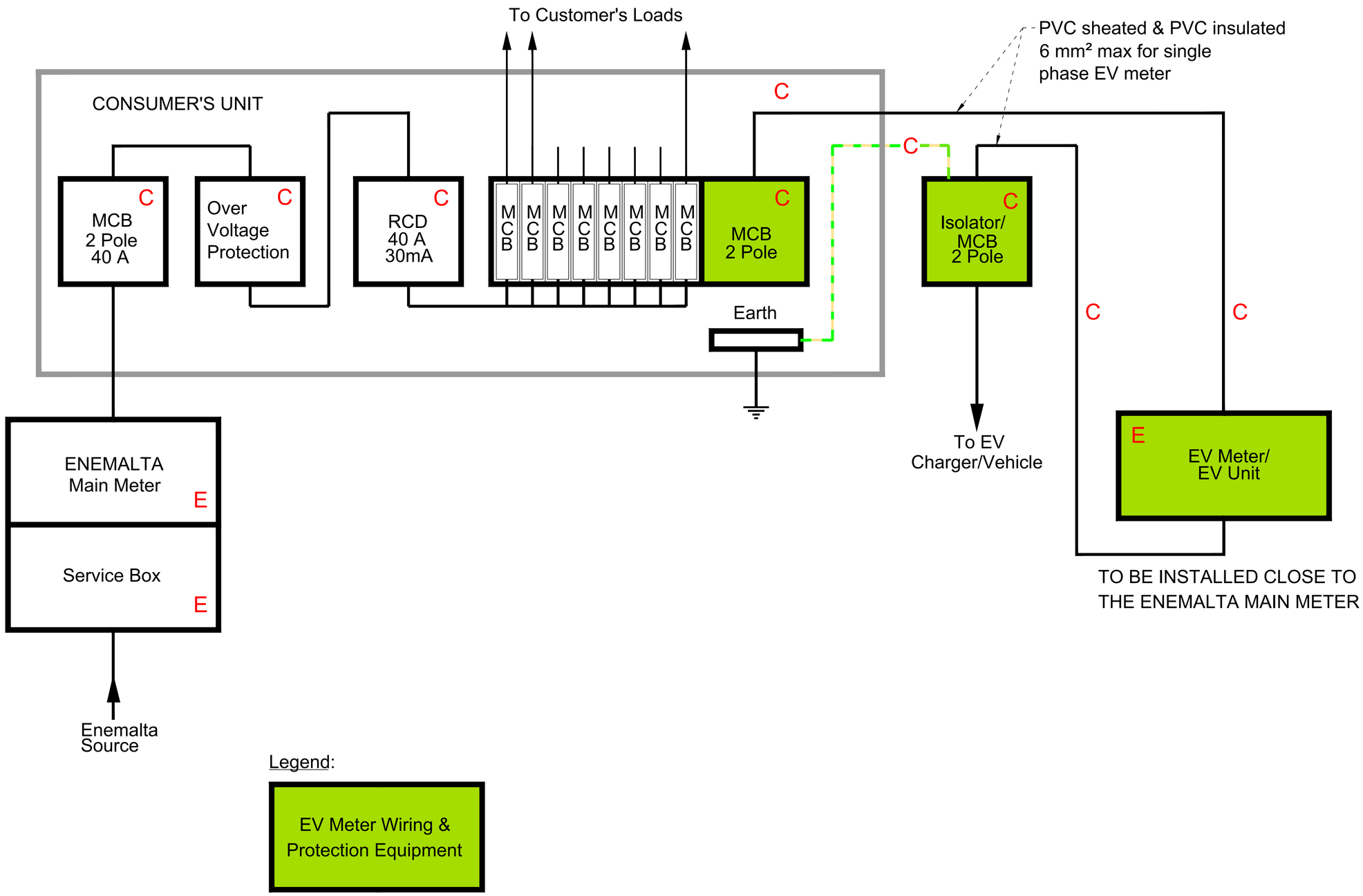

C - To be provided by Consumer
E - To be provided by Enemalta

GENERAL ARRANGEMENT FOR EV UNIT INSTALLATION - SINGLE PHASE MAIN METER